RECORD OF SURVEY NO. 37-26

IN THE UNINCORPORATED TERRITORY OF THE COUNTY OF MONO, STATE OF CALIFORNIA

BEING A SURVEY OF A PORTION OF SECTIONS 9 & 10 TOWNSHIP 3 SOUTH RANGE 29 EAST, M.D.M.

N

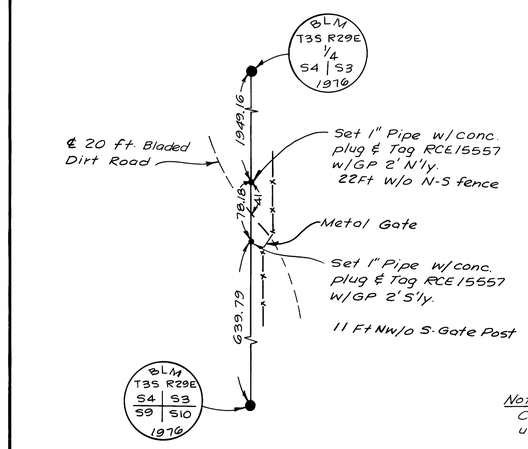

DETAIL "A"
1" = 100'

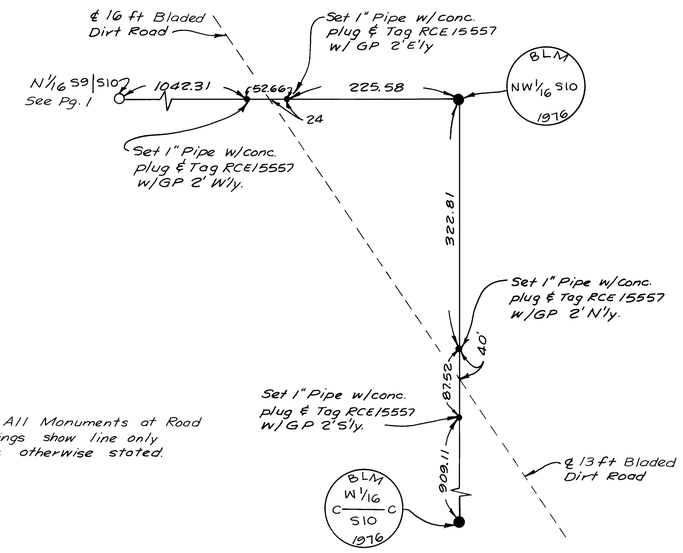

DETAIL "B"
1" = 100'

Note: All Monuments at Road Crossings show line only unless otherwise stated.

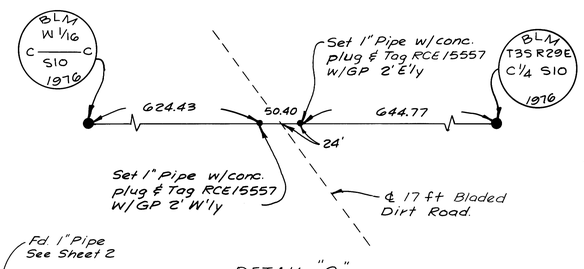

DETAIL "C"

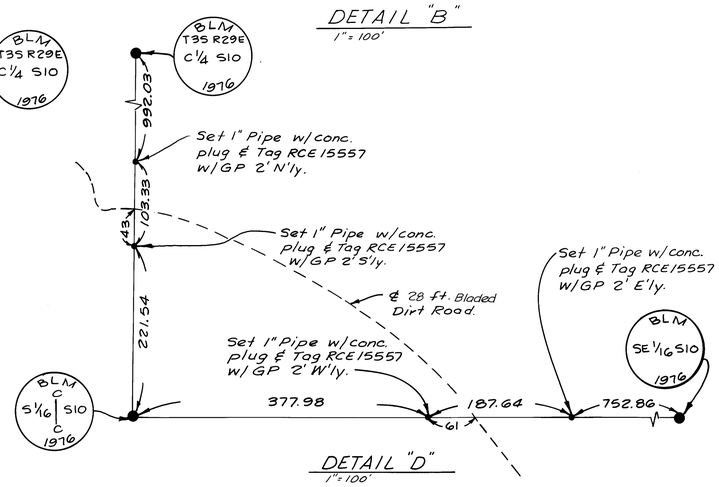

DETAIL "D"
1" = 100'

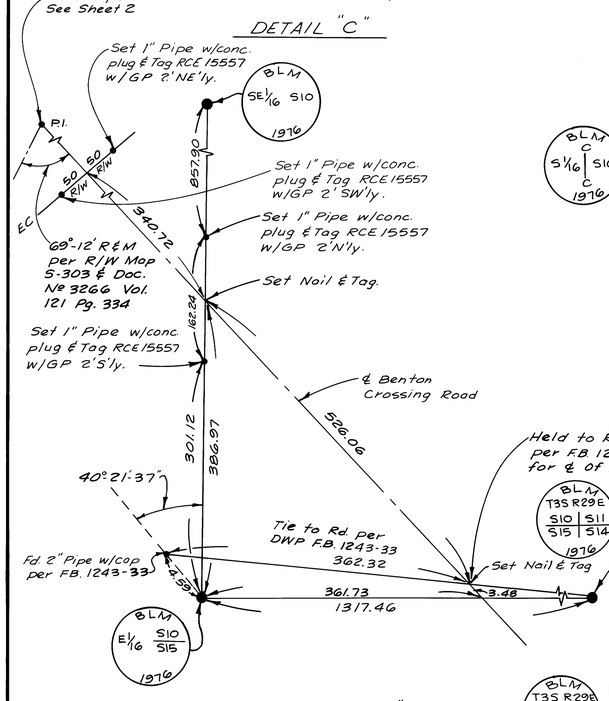

DETAIL "E"
NO SCALE

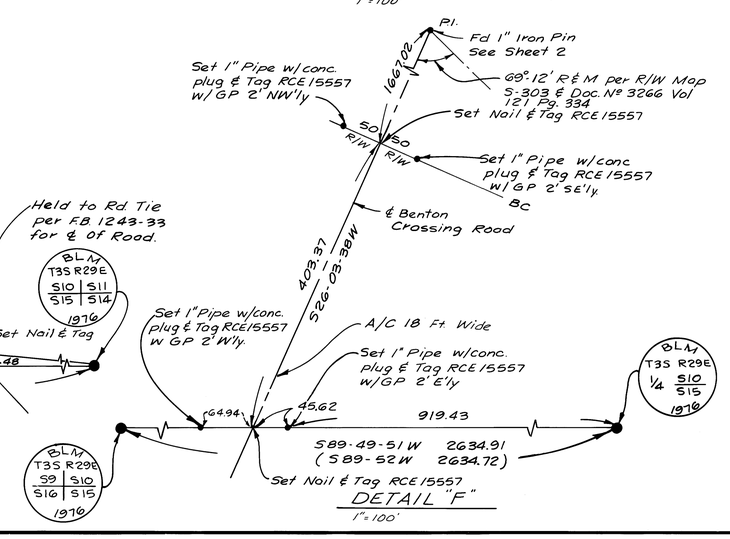

DETAIL "F"
1" = 100'

R/S Vol 1 Page 105-B