POR. T. 2 S., R. 30 E., M.D.B.& M.

Tax Area Code
51-04

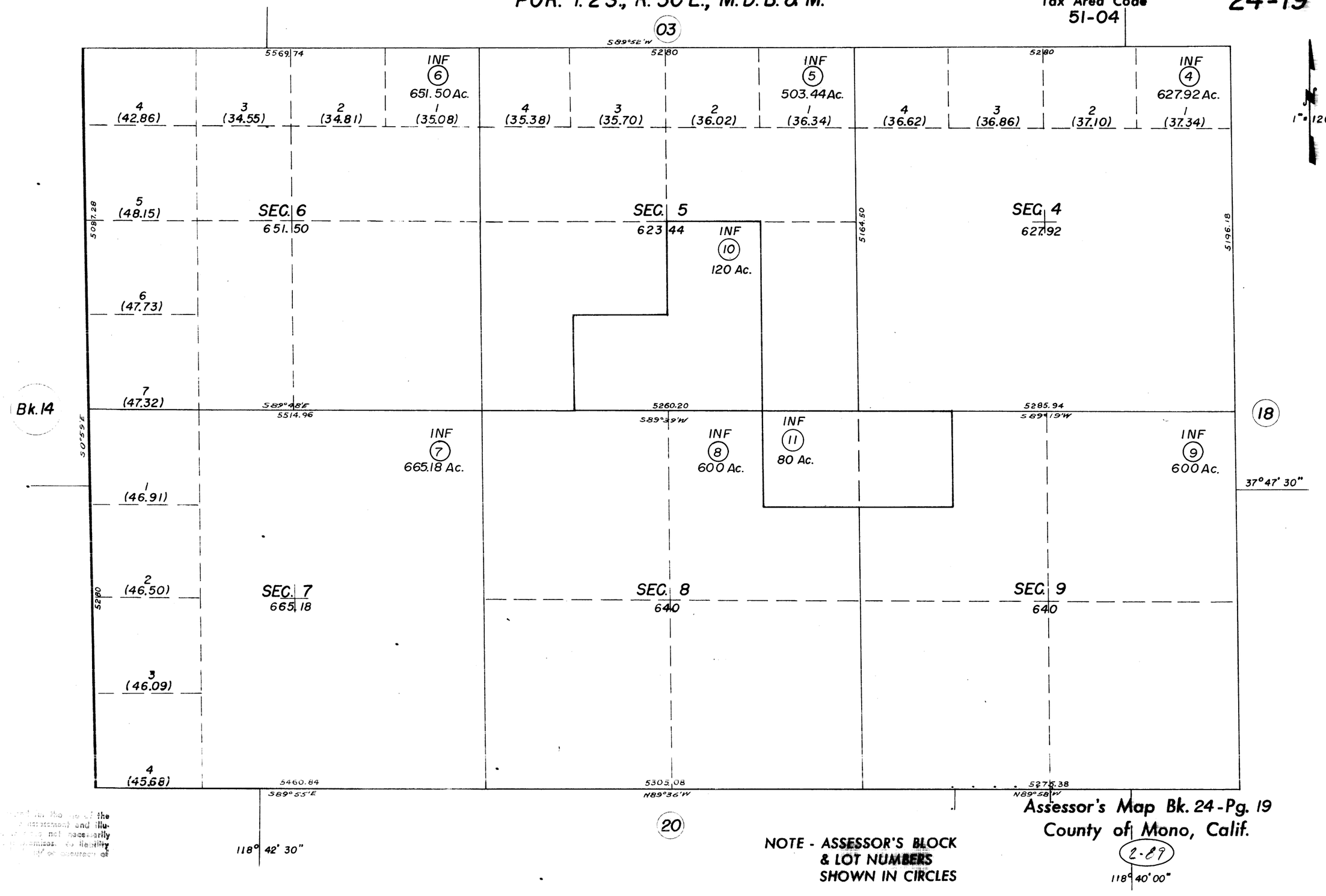

NOTE - ASSESSOR'S BLOCK & LOT NUMBERS SHOWN IN CIRCLES

Assessor's Map Bk. 24 - Pg. 19
County of Mono, Calif.

2-89