SCALE: 1" = 10'

CONDOMINIUM PLAN FOR LOT "1"

TRACT Nº 36-100

CONSISTING OF 5 SHEETS

BEING ALL OF LOT "1" OF THAT CERTAIN TRACT Nº 36-100, IN THE COUNTY OF MONO, STATE OF CALIFORNIA

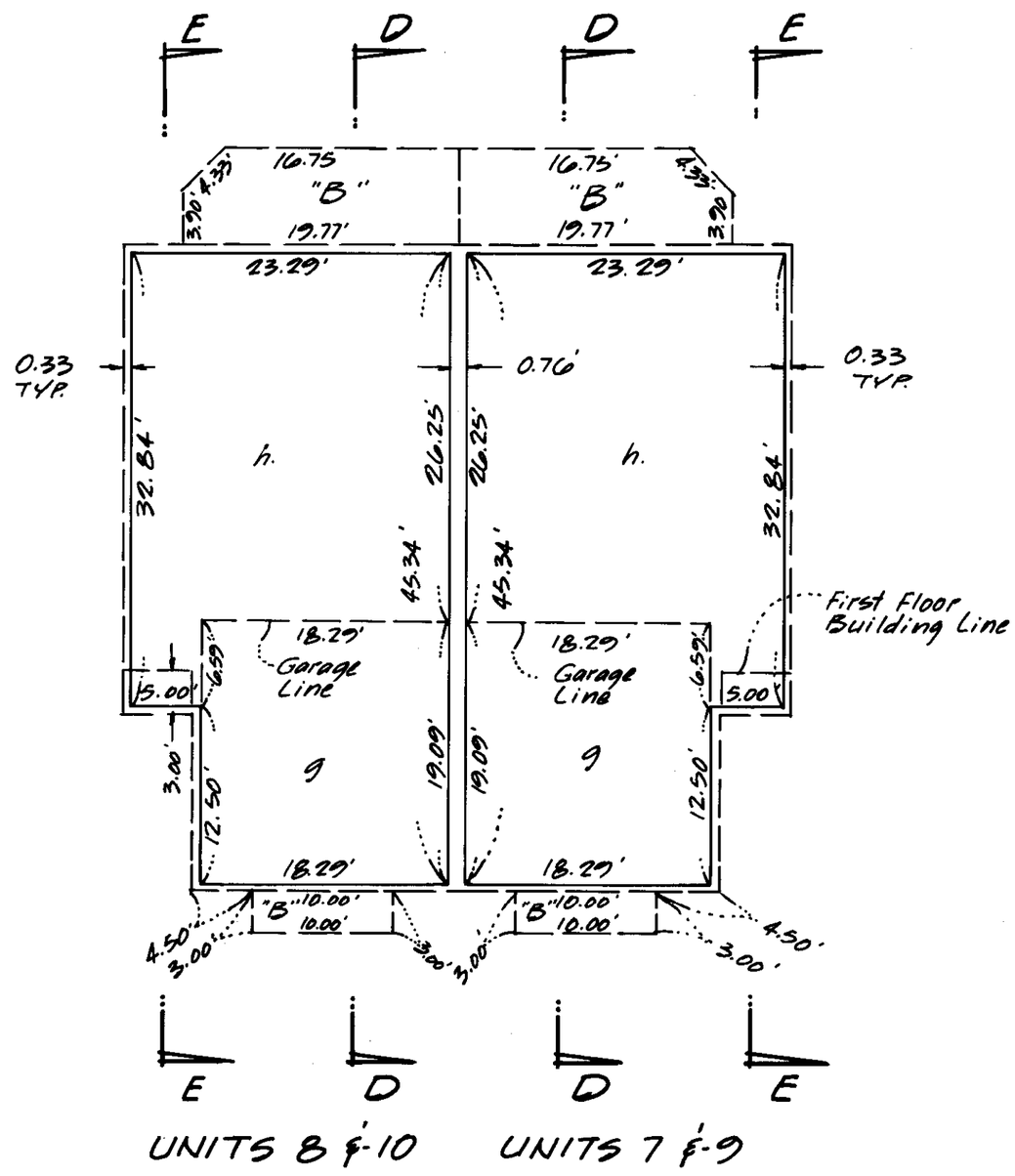

TABULATION OF FLOOR ELEVATIONS		
UNIT Nº	h F.F. ELEV.	g F.F. ELEV (GAR)
7	8117.35	8116.10
8	8117.35	8116.10
9	8122.35	8121.10
10	8122.35	8121.10

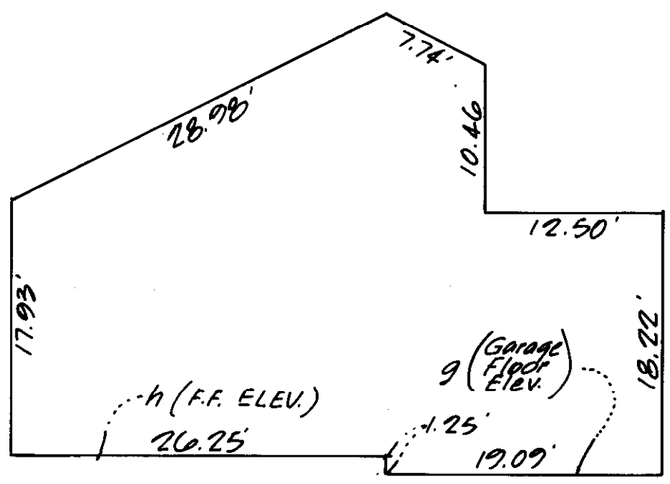

SECTION D-D

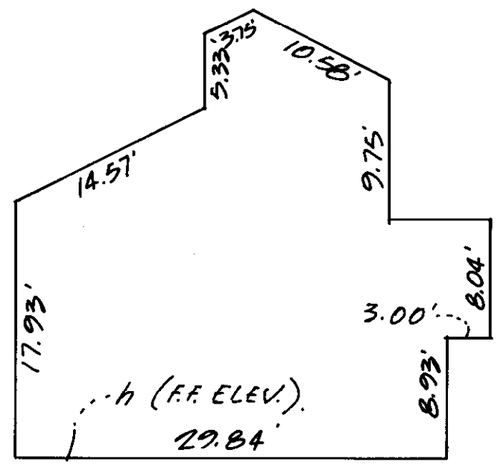

SECTION E-E

Condo Plan Vol. 1 Page 23-C