FLOOR PLAN
BUILDING TYPE II

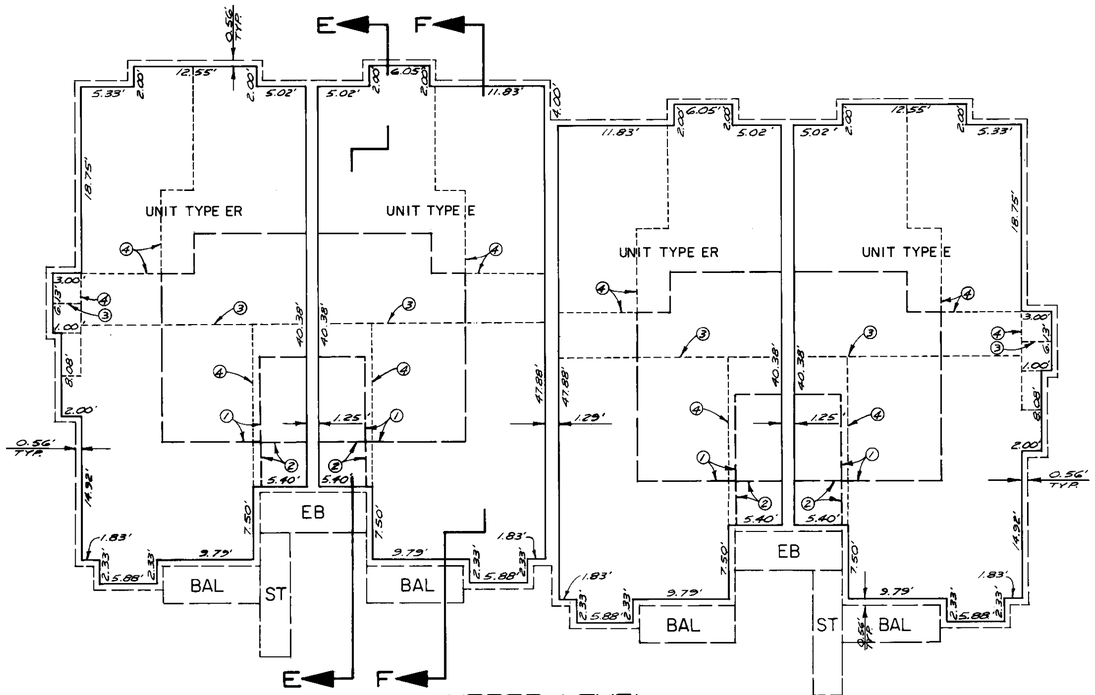

UPPER LEVEL

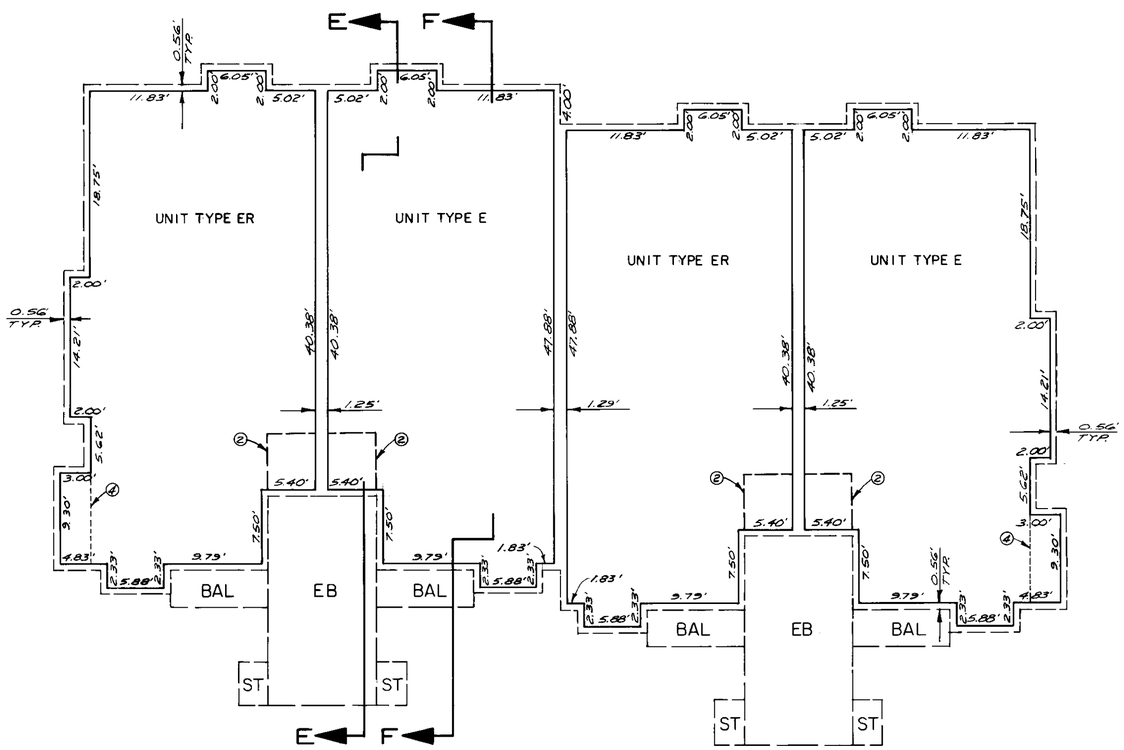

LOWER LEVEL

(BUILDING TYPE II R IS A MIRROR IMAGE OF THE ABOVE)

SCALE: 1" = 10'

LEGEND

1. LINE OF LOFT ABOVE
2. LINE OF RAISED FLOOR
3. LINE OF CEILING RIDGE
4. LINE OF BREAK IN CEILING
5. LINE OF FLOOR ABOVE
6. LINE OF EDGE OF FLOOR

CONDOMINIUM PLAN
FOR PHASE II OF
SNOWCREEK IV

BEING A SUBDIVISION OF LOT 2 OF TRACT 36-132A, TOWN OF MAMMOTH LAKES, COUNTY OF MONO, STATE OF CALIFORNIA.