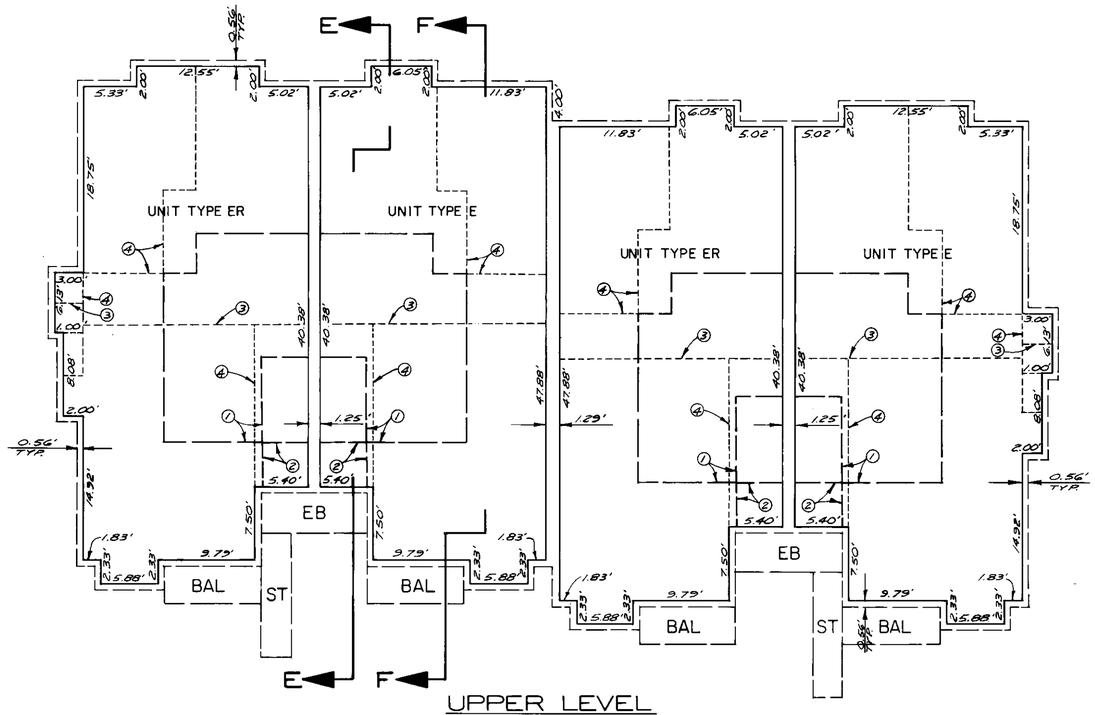

UPPER LEVEL

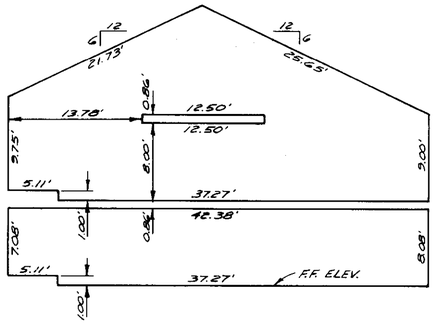

SECTION E-E

UNIT TYPE E

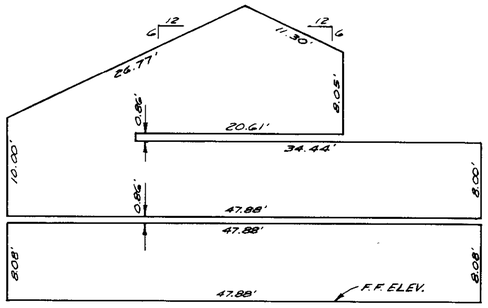

SECTION F-F

UNIT TYPE E

FLOOR PLAN
BUILDING TYPE II

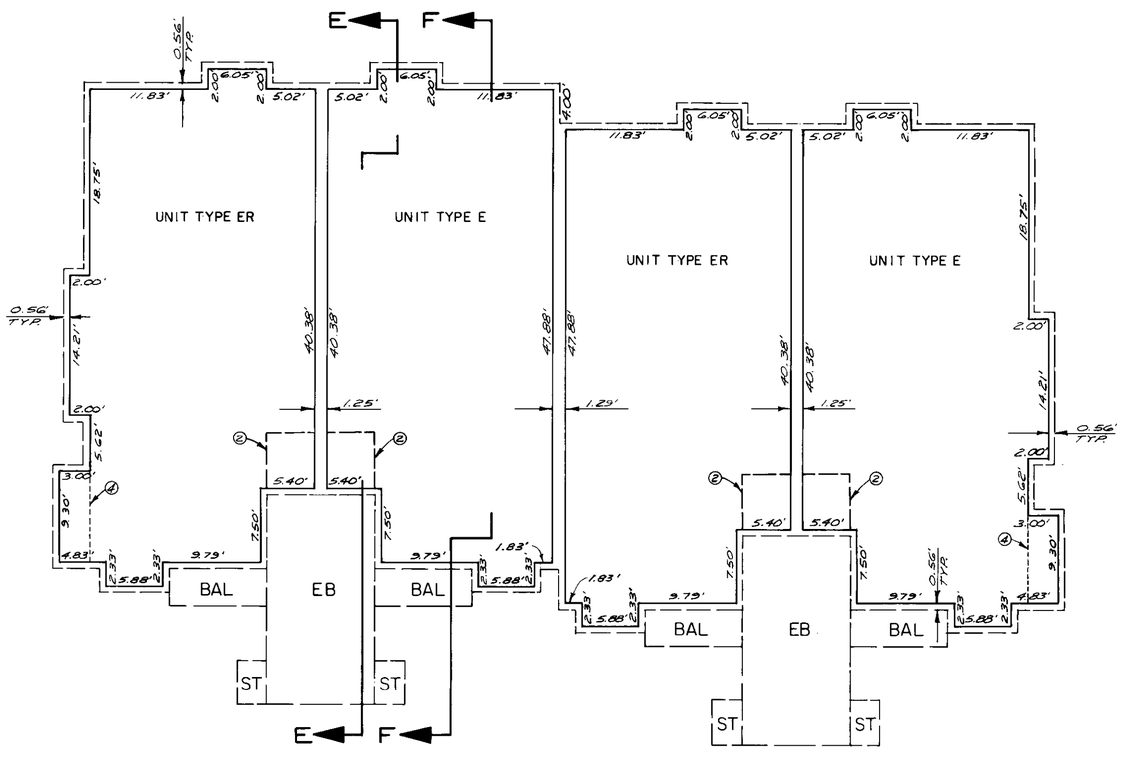

LOWER LEVEL

(BUILDING TYPE II R IS A MIRROR IMAGE OF THE ABOVE)

LEGEND

1. LINE OF LOFT ABOVE
2. LINE OF RAISED FLOOR
3. LINE OF CEILING RIDGE
4. LINE OF BREAK IN CEILING
5. LINE OF FLOOR ABOVE
6. LINE OF EDGE OF FLOOR

CONDOMINIUM PLAN
FOR PHASE 4 OF

SNOWCREEK IV

BEING A SUBDIVISION OF PARCEL I
OF RECORD OF SURVEY NO. 36-51
IN THE TOWN OF MAMMOTH LAKES
MONO COUNTY, CALIFORNIA

SCALE: 1" = 10'

TRIAD ENGINEERING CORP., MAMMOTH LAKES, CA.