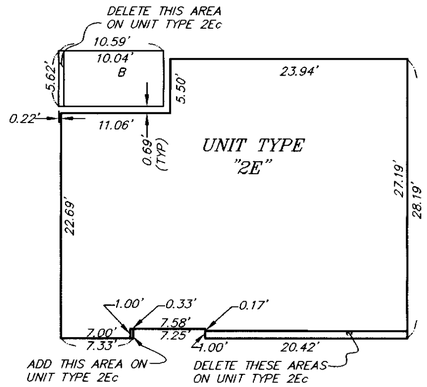

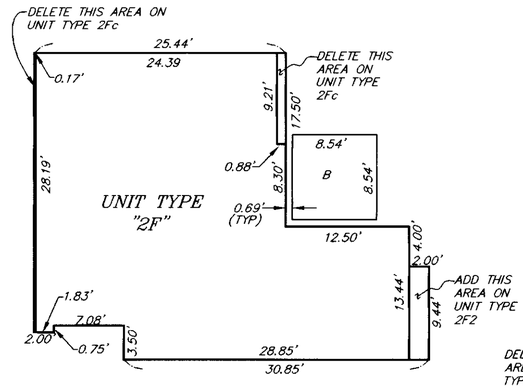

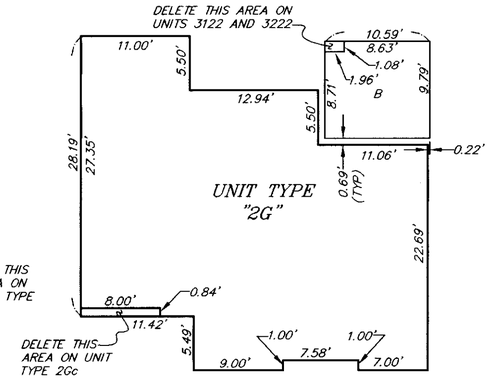

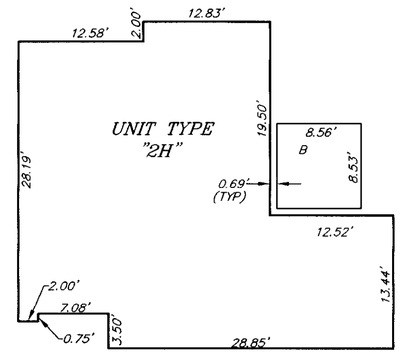

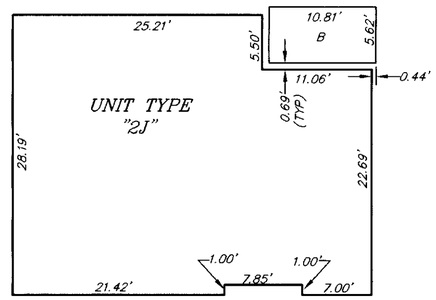

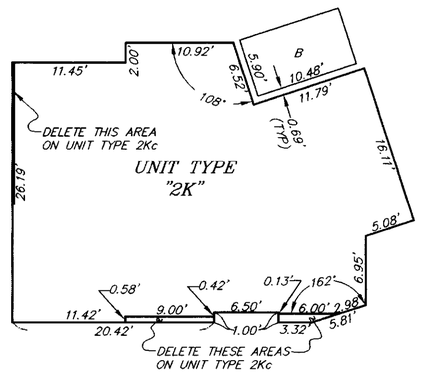

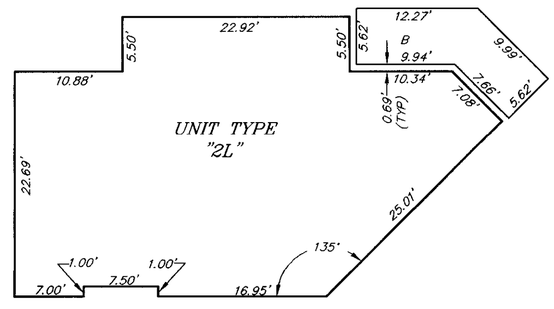

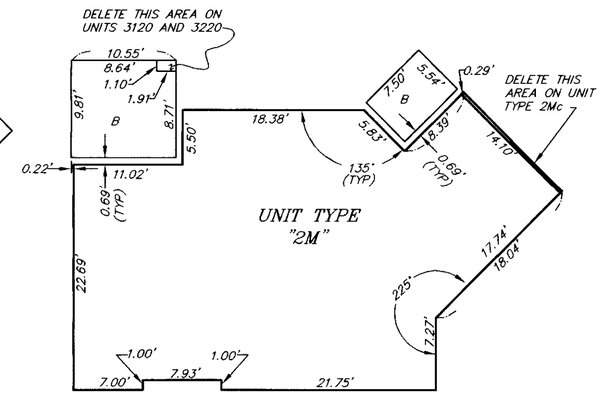

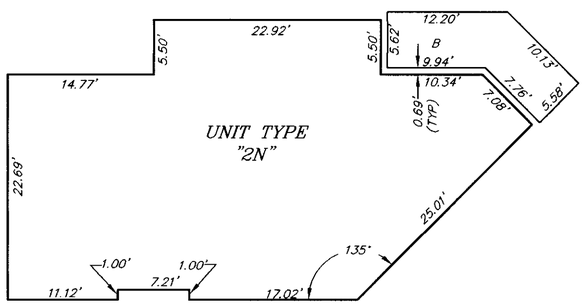

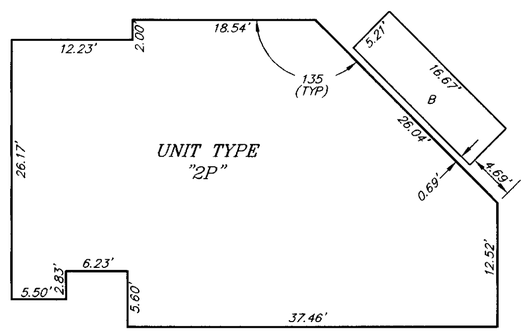

NOTE: THE NUMBER IN THE UNIT TYPE DESIGNATION STANDS FOR THE NUMBER OF BEDROOMS IN THE UNIT.

CONDOMINIUM PLAN FOR

THE VILLAGE AT MAMMOTH — PHASE I

TOWN OF MAMMOTH LAKES, MONO COUNTY, CALIFORNIA

BEING A SUBDIVISION OF LOT 1 OF TRACT NO. 36-193A PER MAP RECORDED IN BOOK 10 OF TRACT MAPS, AT PAGES 60 THROUGH 60C

SCALE: 1" = 10'

1769\NorthVillage-condo.dwg
triad/holmes associates

C:\Land Projects\R21769\dwg\NorthVillage-condo-phII-split.dwg, 08/21/2001 04:55:02 AM, Administrator