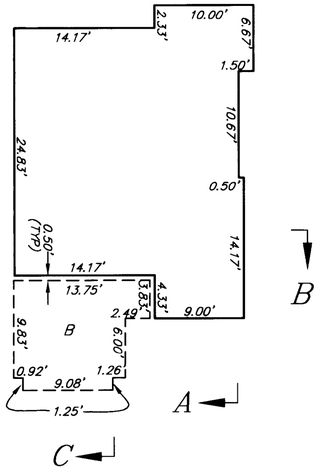

FIRST LEVEL
PLANS A AND A1
(PLAN A IS A MIRROR IMAGE)

FIRST LEVEL ELEVATION LIMITS

UNIT	LOWER	UPPER
16&17	8059.89	8068.88
18&19	8058.99	8067.98
20&21	8050.99	8059.98
22&23	8053.59	8062.58

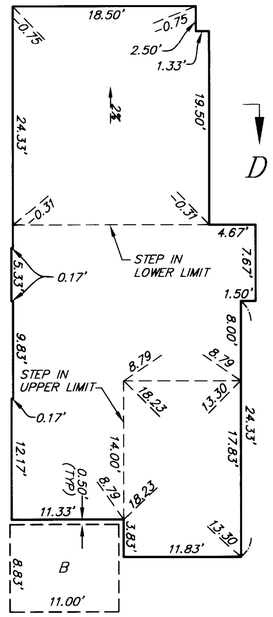

SECOND LEVEL
PLANS A AND A1
(PLAN A IS A MIRROR IMAGE)

SECOND LEVEL ELEVATION LIMITS

UNIT	LOWER*	UPPER*
16&17	8069.90	8078.69
18&19	8069.00	8077.79
20&21	8061.00	8069.79
22&23	8063.60	8072.39

*EXCEPT AS SHOWN ABOVE

$\underline{\text{-X.XX}}$ = LOWER LIMIT OF LEVEL-X

$\underline{\text{X.XX}}$ = UPPER LEVEL LIMIT AT POINT SHOWN (LOWER LIMIT OF LEVEL+X)

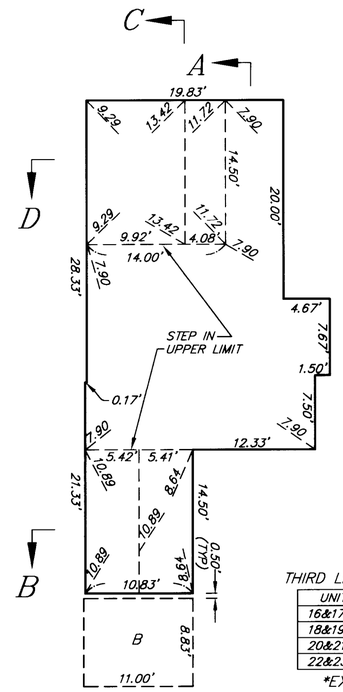

THIRD LEVEL
PLAN A1

THIRD LEVEL ELEVATION LIMITS

UNIT	LOWER	UPPER*
16&17	8079.90	8087.80
18&19	8079.00	8086.90
20&21	8071.00	8078.90
22&23	8073.60	8081.50

*EXCEPT AS SHOWN

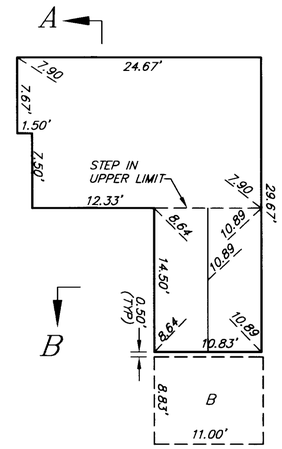

THIRD LEVEL
PLAN A

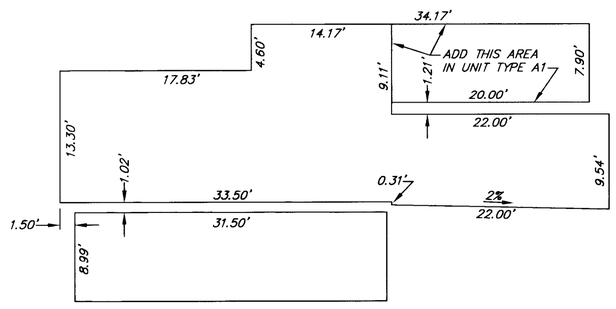

A–A

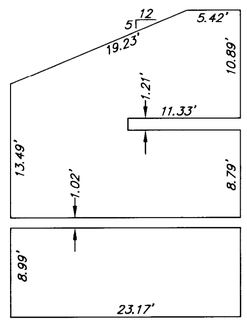

B–B
(PLAN A IS A MIRROR IMAGE)

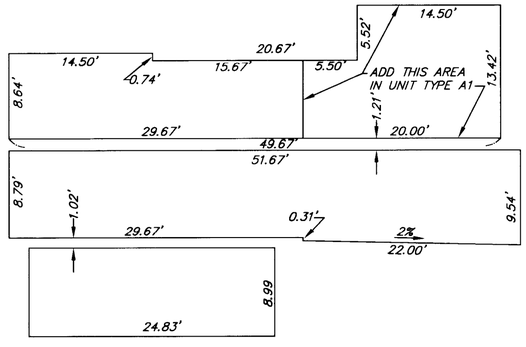

C–C

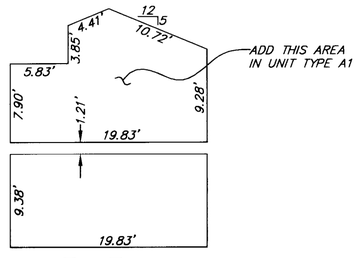

D–D

SCALE: 1" = 10'

CONDOMINIUM PLAN FOR

JUNIPER CREST PHASE I

TOWN OF MAMMOTH LAKES, MONO COUNTY, CALIFORNIA

BEING A SUBDIVISION OF LOT 1 OF TRACT NO. 36-202A PER MAP RECORDED IN BOOK 10 OF TRACT MAPS, AT PAGES 61 THROUGH 68A

1795\TheCrest-CONDO.dwg
triad/holmes associates

C:\Land Projects R2\1795\dwg\TheCrest-CONDO.dwg, 08/13/2003 11:25:03 AM, Jonathan Pitt