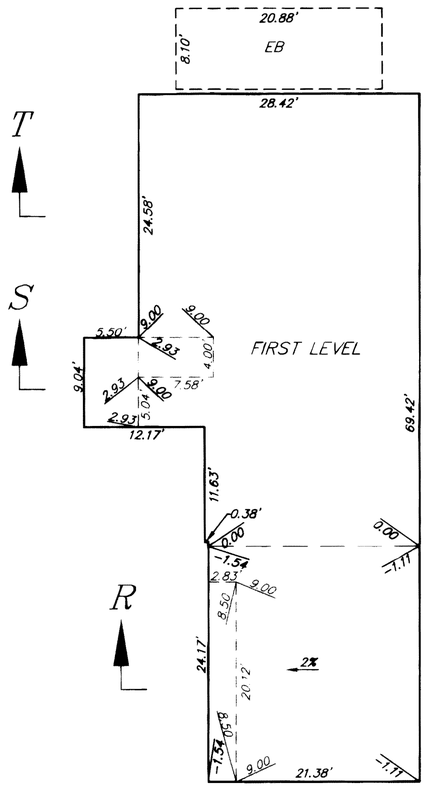

FIRST LEVEL ELEVATION LIMITS

UNIT	LOWER*	UPPER*
1184	7885.74	7894.74
1186	7883.94	7892.94
1189	7883.34	7892.34

*EXCEPT AS SHOWN ABOVE

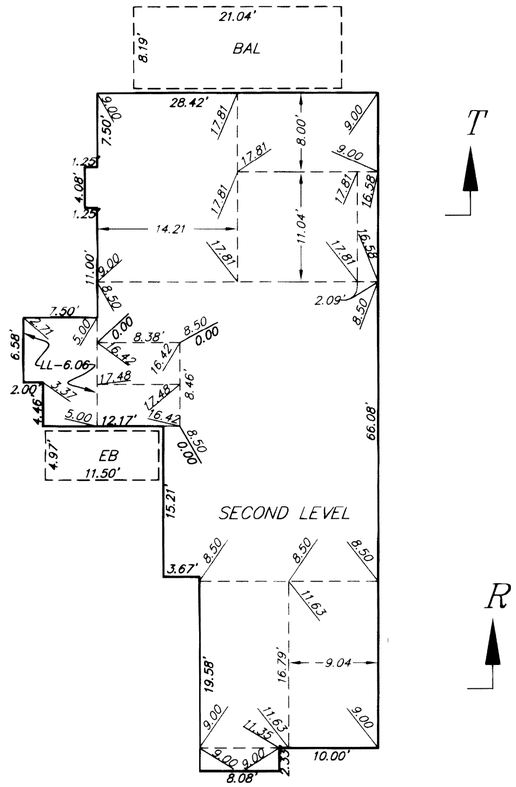

SECOND LEVEL ELEVATION LIMITS

UNIT	LOWER*	UPPER*
1184	7896.05	7905.05
1186	7893.17	7903.17
1189	7892.77	7902.77

*EXCEPT AS SHOWN ABOVE

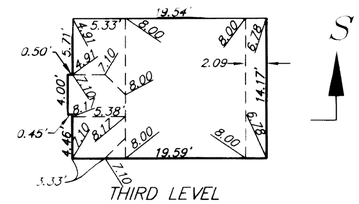

THIRD LEVEL ELEVATION LIMITS

UNIT	LOWER*	UPPER*
1184	7906.36	7914.36
1186	7904.48	7912.48
1189	7904.08	7912.08

*EXCEPT AS SHOWN ABOVE

X.XX = UPPER LEVEL LIMIT AT POINT SHOWN (LOWER LIMIT OF LEVEL+X)

X.XX = LOWER LIMIT OF LEVEL-X

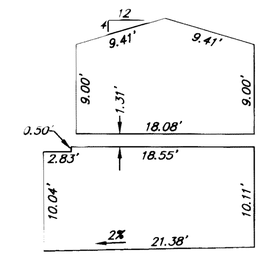

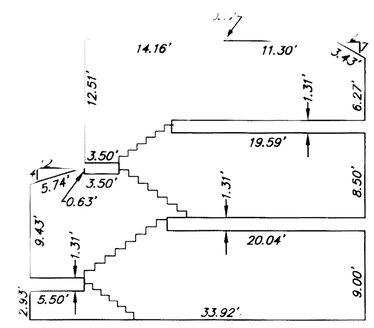

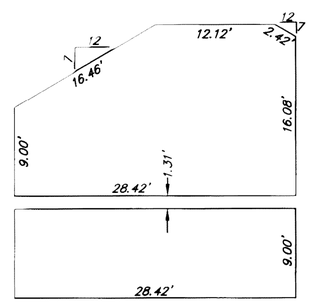

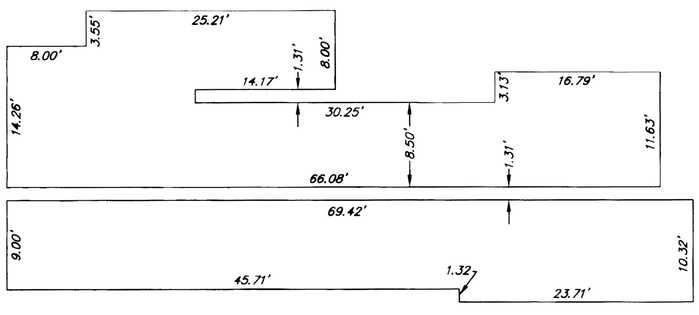

UNIT PLAN TYPE 6 - PLANS AND SECTIONS

SCALE: 1"=10'

CONDOMINIUM PLAN FOR

THE LODGES AT SNOWCREEK PHASE I

TOWN OF MAMMOTH LAKES, MONO COUNTY, CALIFORNIA

BEING A SUBDIVISION OF LOT 1 OF TRACT NO. 36-194A PER MAP RECORDED IN BOOK 10 OF TRACT MAPS, AT PAGES 71 THROUGH 118

triad/holmes assoc.

SHEET 8 OF 8

C:\Land Projects 2004\1849-snowcreek-VI\dwg\SNOWCREEK-VI-Condo Phl.dwg, 4/15/2004 12:34:52 PM, Jonathan Pitt