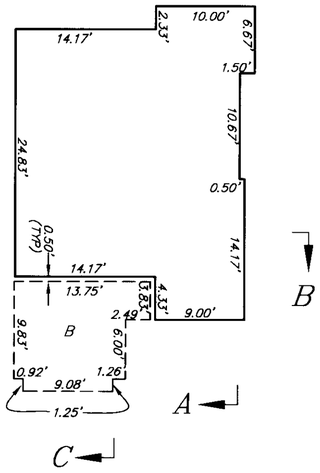

FIRST LEVEL
PLANS A AND A1
(PLAN A IS A MIRROR IMAGE)

FIRST LEVEL ELEVATION LIMITS

UNIT	LOWER	UPPER
12&13	8065.59	8074.58
14&15	8063.49	8072.48
24&25	8055.09	8064.08
26&27	8058.59	8067.58

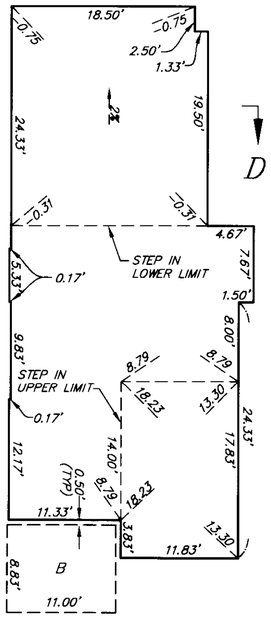

SECOND LEVEL
PLANS A AND A1
(PLAN A IS A MIRROR IMAGE)

SECOND LEVEL ELEVATION LIMITS

UNIT	LOWER*	UPPER*
12&13	8075.60	8084.39
14&15	8073.50	8082.29
24&25	8065.10	8073.89
26&27	8068.60	8077.39

*EXCEPT AS SHOWN ABOVE

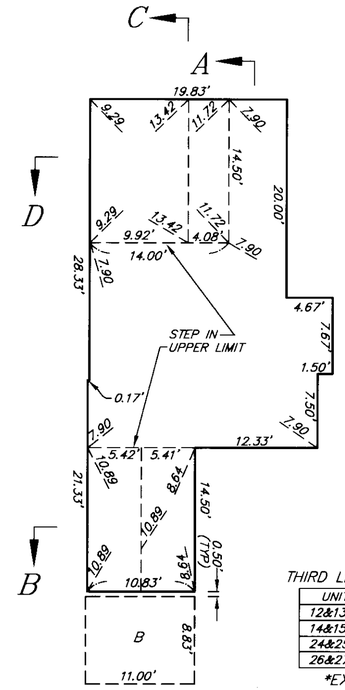

THIRD LEVEL
PLAN A1

THIRD LEVEL ELEVATION LIMITS

UNIT	LOWER	UPPER*
12&13	8085.60	8093.50
14&15	8083.50	8091.40
24&25	8075.10	8083.00
26&27	8078.60	8086.50

*EXCEPT AS SHOWN

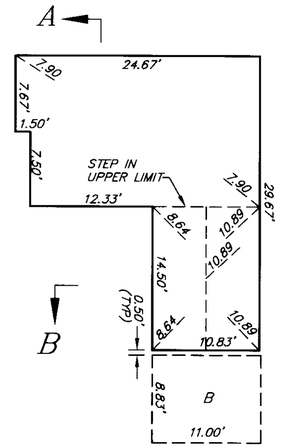

THIRD LEVEL
PLAN A

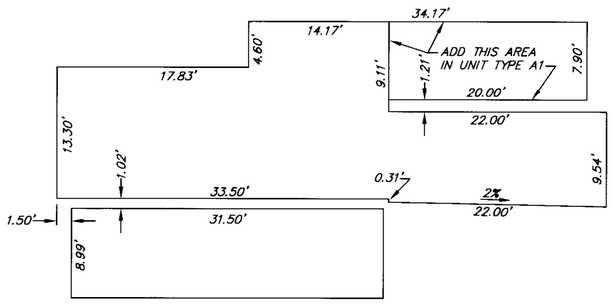

A–A

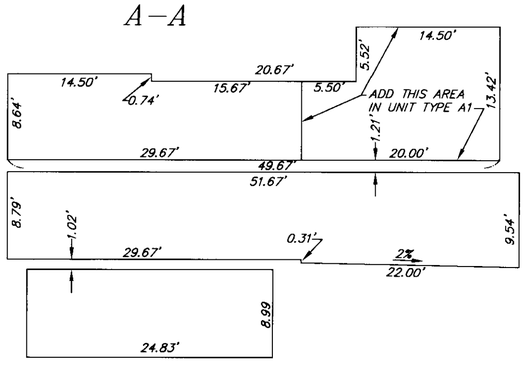

C–C

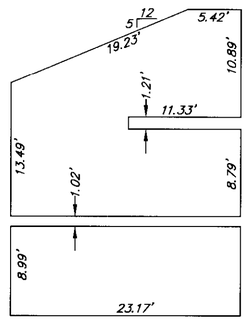

B–B
(PLAN A IS A MIRROR IMAGE)

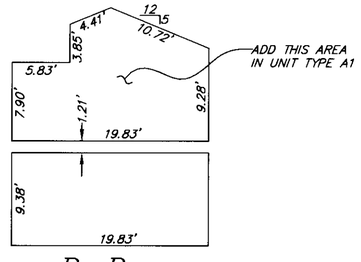

D–D

SCALE: 1" = 10'

= LOWER LIMIT OF LEVEL–X

= UPPER LEVEL LIMIT AT POINT SHOWN (LOWER LIMIT OF LEVEL+X)

CONDOMINIUM PLAN FOR

JUNIPER CREST PHASE II

TOWN OF MAMMOTH LAKES, MONO COUNTY, CALIFORNIA

BEING A SUBDIVISION OF LOT 1 OF TRACT NO. 36–202B PER MAP RECORDED IN BOOK 10 OF TRACT MAPS, AT PAGES 15 THROUGH 15A

triad/holmes assoc.

1795\TheCrest-CONDO-PHII.dwg