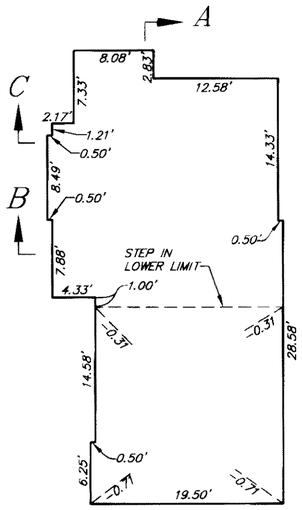

FIRST LEVEL (GARAGE LEVEL)
PLAN B

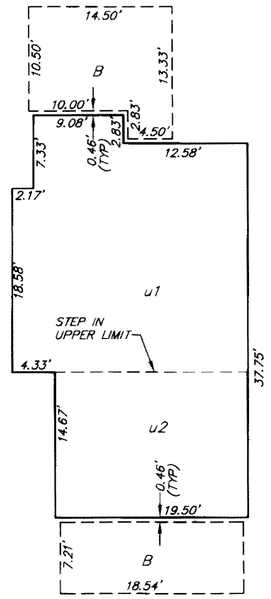

SECOND LEVEL
PLAN B

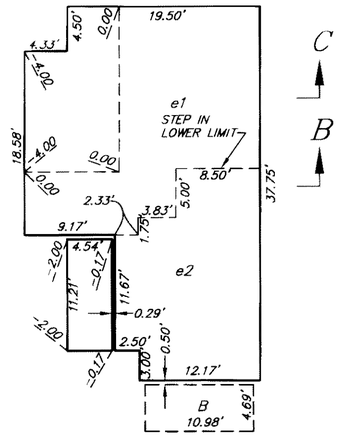

THIRD LEVEL
PLAN B

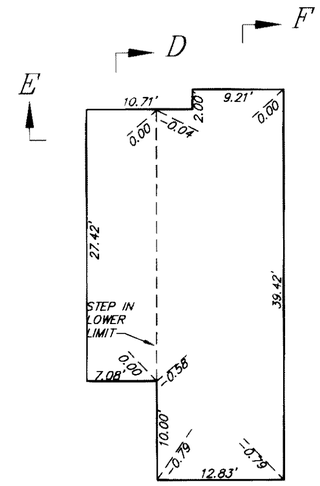

FIRST LEVEL (GARAGE LEVEL)
PLAN C

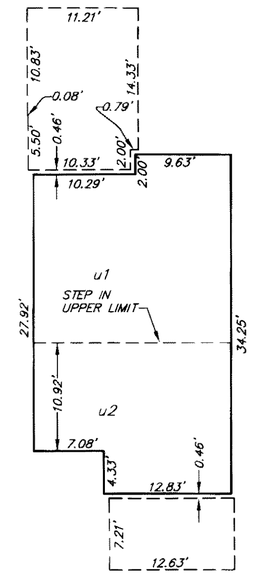

SECOND LEVEL
PLAN C

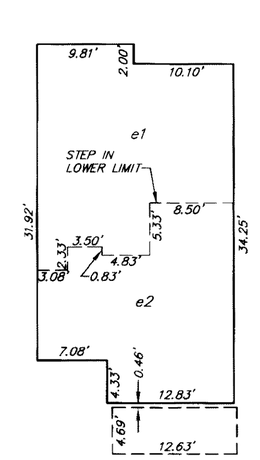

THIRD LEVEL
PLAN C

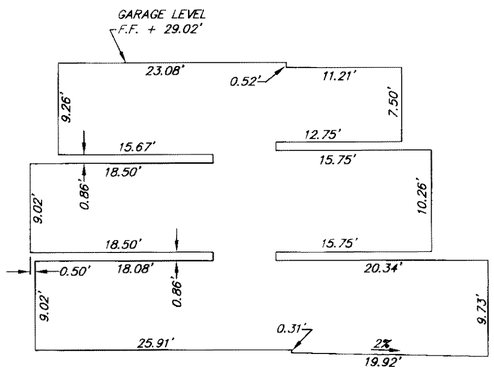

A–A

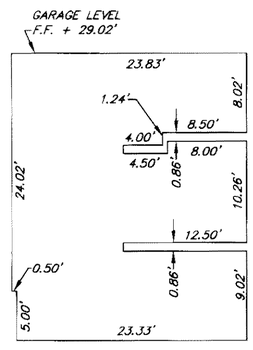

B–B

THIRD LEVEL ELEVATION LIMITS

UNIT	LOWER: e1	e2	UPPER*
5,6,7,AND 8	8093.36	8094.60	8102.62
9,10,AND 11	8095.86	8097.10	8105.12

SECOND LEVEL ELEVATION LIMITS

UNIT	LOWER	UPPER: u1	u2
5,6,7,AND 8	8083.48	8092.50	8093.74
9,10,AND 11	8085.98	8095.00	8096.24

FIRST LEVEL ELEVATION LIMITS

UNIT	LOWER*	UPPER
5,6,7,AND 8	8073.60	8082.62
9,10,AND 11	8076.10	8085.12

= CHANGE IN LOWER LIMIT AT POINT SHOWN

= CHANGE IN UPPER LIMIT AT POINT SHOWN

F.F. = FINISHED FLOOR

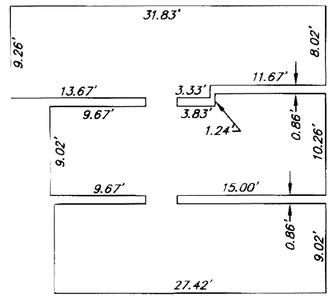

D–D

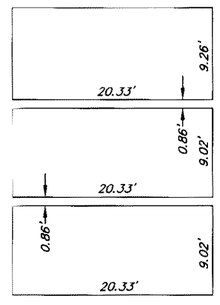

E–E

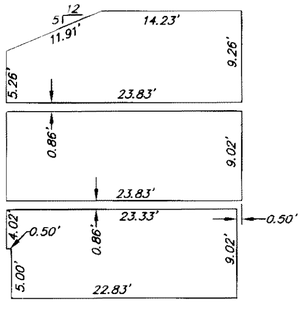

C–C

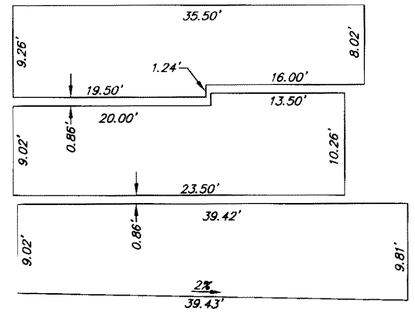

F–F

SCALE: 1" = 10'

triad/holmes assoc.

1795\TheCrest-CONDO-PHII.dwg

CONDOMINIUM PLAN FOR
JUNIPER CREST PHASE II

TOWN OF MAMMOTH LAKES, MONO COUNTY, CALIFORNIA

BEING A SUBDIVISION OF LOT 1 OF TRACT NO. 36-202B PER MAP RECORDED IN BOOK 10 OF TRACT MAPS, AT PAGES 15 THROUGH 15A

C:\Land Projects 2004\1795\dwg\TheCrest-CONDO-PHII.dwg, 7/6/2004 12:27:28 PM, Jonathan Pitt