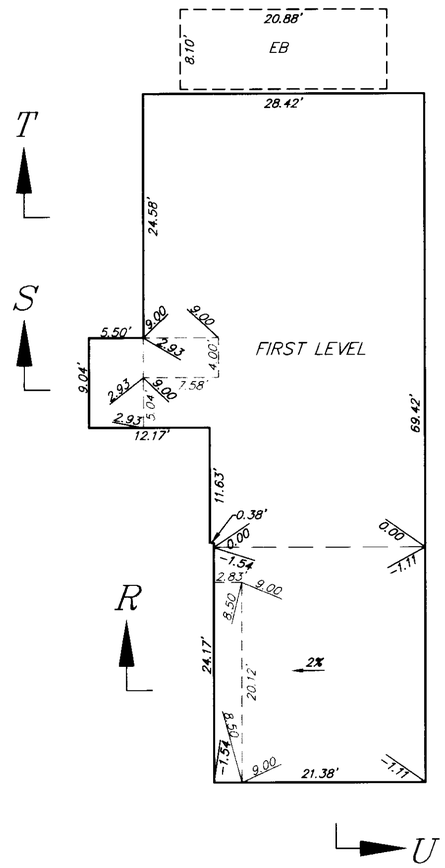

FIRST LEVEL ELEVATION LIMITS

UNIT	LOWER*	UPPER*
1195	7883.54	7892.54
1196	7884.54	7893.54
1199	7884.14	7893.14
1200	7883.94	7892.94

*EXCEPT AS SHOWN ABOVE

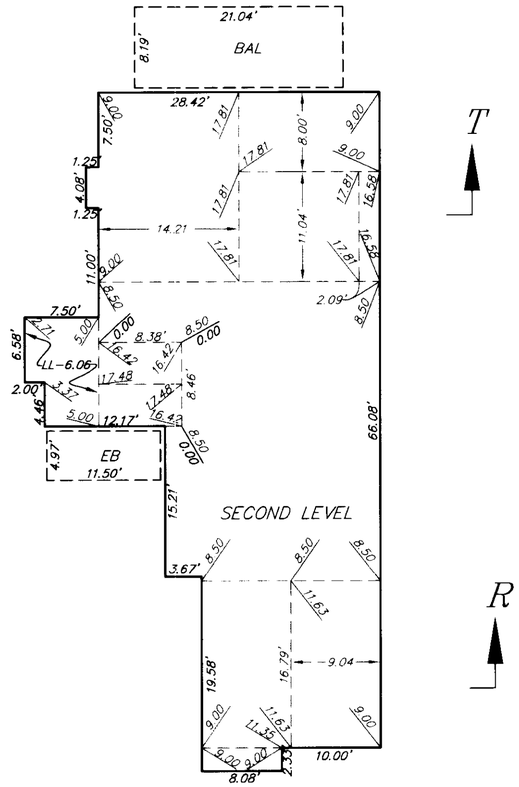

SECOND LEVEL ELEVATION LIMITS

UNIT	LOWER*	UPPER*
1195	7883.85	7902.85
1196	7894.85	7903.85
1199	7894.45	7903.45
1200	7894.25	7903.25

*EXCEPT AS SHOWN ABOVE

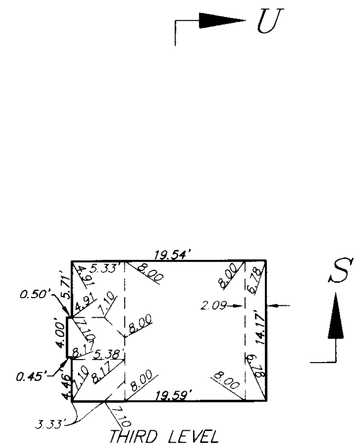

THIRD LEVEL ELEVATION LIMITS

UNIT	LOWER*	UPPER*
1195	7904.16	7913.16
1196	7905.16	7914.16
1199	7904.76	7913.76
1200	7904.56	7913.56

*EXCEPT AS SHOWN ABOVE

X.XX = UPPER LEVEL LIMIT AT POINT SHOWN (LOWER LIMIT OF LEVEL+X)

X.XX = LOWER LIMIT OF LEVEL-X

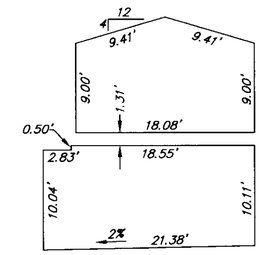

SECTION R-R

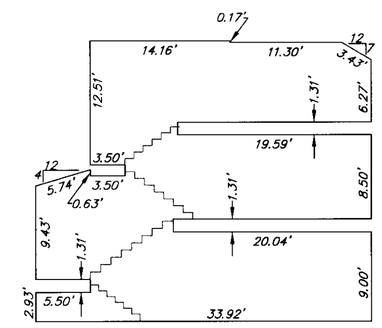

SECTION S-S

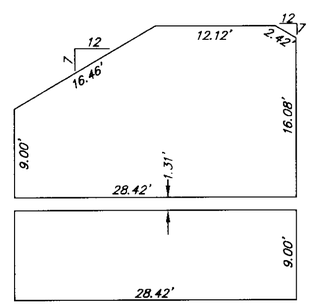

SECTION T-T

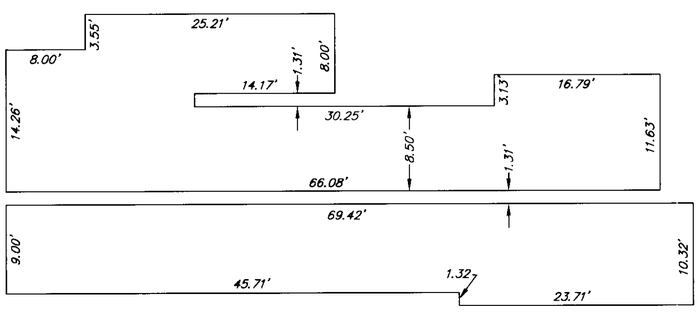

SECTION U-U

UNIT PLAN TYPE 6 - PLANS AND SECTIONS

SCALE: 1"=10'

CONDOMINIUM PLAN FOR

THE LODGES AT SNOWCREEK PHASE II

TOWN OF MAMMOTH LAKES, MONO COUNTY, CALIFORNIA

BEING A SUBDIVISION OF LOT 1 OF TRACT NO. 36-194B PER MAP RECORDED IN BOOK 10 OF TRACT MAPS, AT PAGES 76 THROUGH 78

triad/holmes assoc.

C:\Land Projects 2004\1849-snowcreek-VI\dwg\SNOWCREEK-VI-Condo PhII.dwg, 7/20/2004 1:20:24 PM, Jonathan Pitt