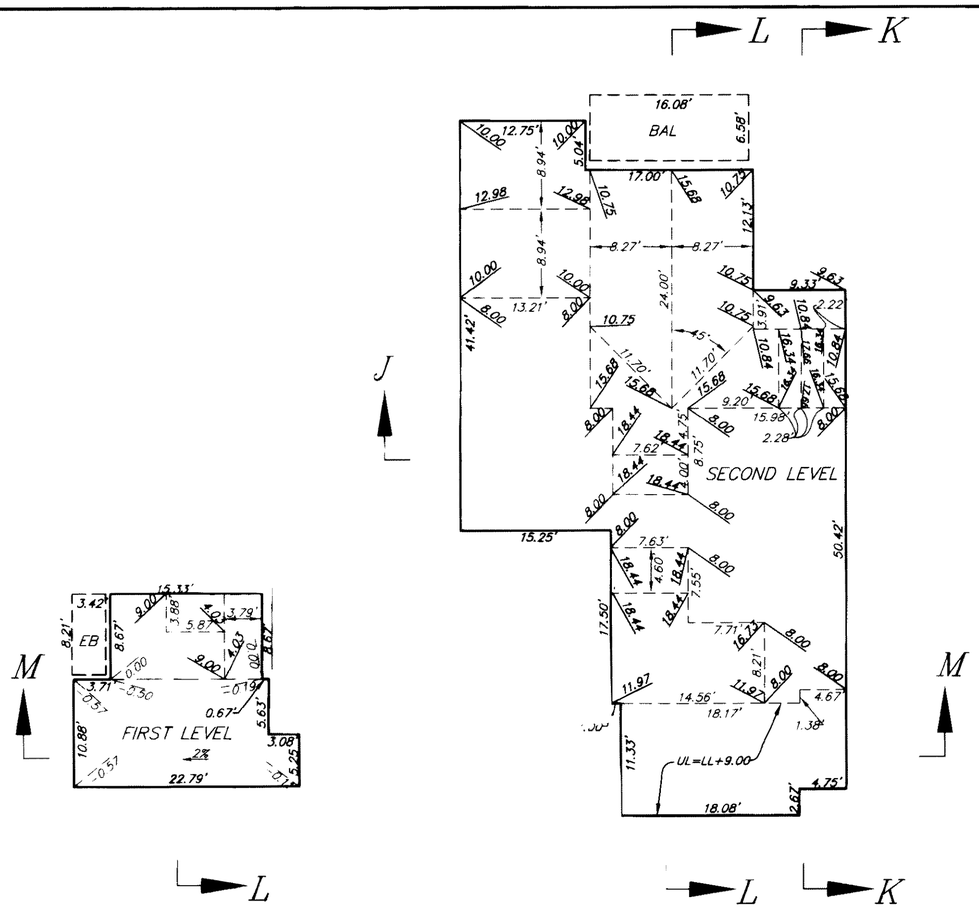

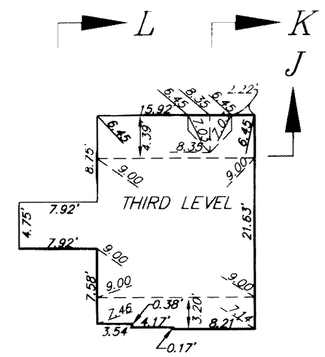

LEVEL 3

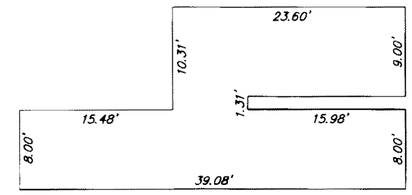

SECTION J-J

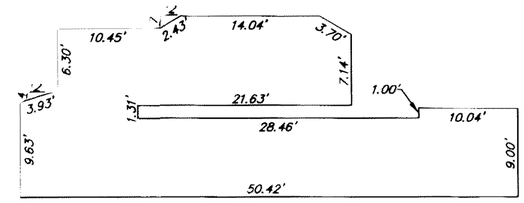

SECTION K-K

THIRD LEVEL ELEVATION LIMITS

UNIT	LOWER*	UPPER*
1162	7909.52	7918.52
1166	7910.42	7919.42
1176	7909.42	7918.42

*EXCEPT AS SHOWN ABOVE

L

FIRST LEVEL ELEVATION LIMITS

UNIT	LOWER*	UPPER*
1162	7888.90	7897.90
1166	7889.80	7898.80
1176	7889.00	7898.00

*EXCEPT AS SHOWN ABOVE

L K

SECOND LEVEL ELEVATION LIMITS

UNIT	LOWER*	UPPER*
1162	7899.21	7908.21
1166	7900.11	7909.11
1176	7899.31	7908.11

*EXCEPT AS SHOWN ABOVE

NOTES:

X.XX = UPPER LEVEL LIMIT AT POINT SHOWN (LOWER LIMIT OF LEVEL+X)

X.XX = LOWER LIMIT OF LEVEL-X

UNIT 1176 IS A MIRROR IMAGE

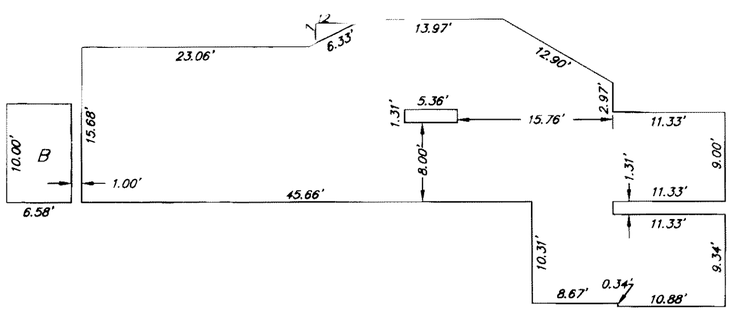

SECTION L-L

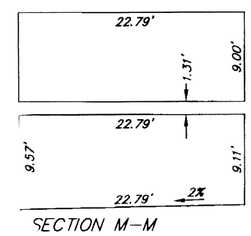

SECTION M-M

CONDOMINIUM PLAN FOR

THE LODGES AT SNOWCREEK PHASE III

TOWN OF MAMMOTH LAKES, MONO COUNTY, CALIFORNIA

BEING A SUBDIVISION OF LOT 1 OF TRACT NO. 36-194C PER MAP RECORDED IN BOOK 10 OF TRACT MAPS, AT PAGES 93 THROUGH 98

triad/holmes assoc.

SHEET 7 OF 9

UNIT PLAN TYPE 4 - PLANS AND SECTIONS

SCALE: 1"=10'