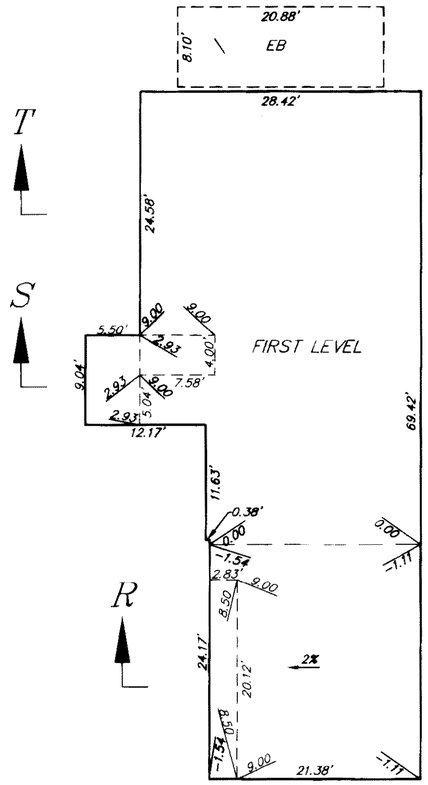

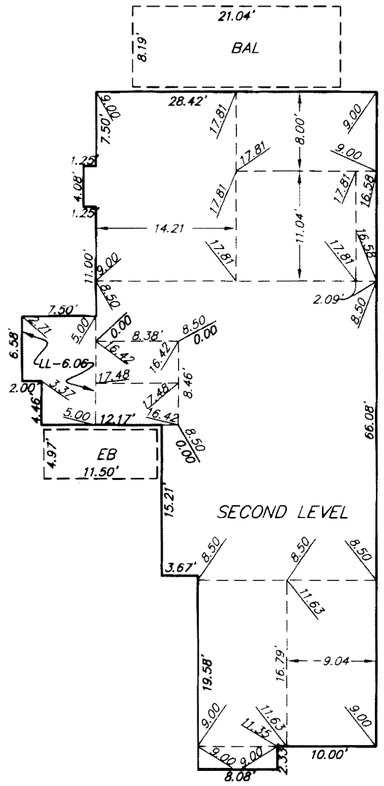

U

FIRST LEVEL ELEVATION LIMITS

UNIT	LOWER*	UPPER*
1169	7891.64	7900.64
1170	7891.54	7900.54
1173	7890.14	7899.14
1178	7889.14	7898.14
1180	7886.84	7895.84
1183	7885.84	7894.84

*EXCEPT AS SHOWN ABOVE

SECOND LEVEL ELEVATION LIMITS

UNIT	LOWER*	UPPER*
1169	7901.95	7910.95
1170	7901.85	7910.85
1173	7900.45	7909.45
1178	7899.45	7908.45
1180	7897.15	7906.15
1183	7896.15	7905.15

*EXCEPT AS SHOWN ABOVE

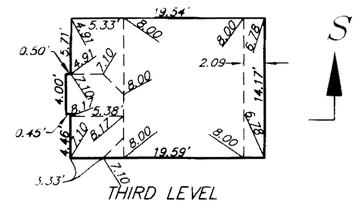

THIRD LEVEL

THIRD LEVEL ELEVATION LIMITS

UNIT	LOWER*	UPPER*
1169	7912.26	7920.26
1170	7912.16	7920.16
1173	7910.76	7918.76
1178	7909.76	7917.76
1180	7907.46	7915.46
1183	7906.46	7914.46

*EXCEPT AS SHOWN ABOVE

X.XX = UPPER LEVEL LIMIT AT POINT SHOWN (LOWER LIMIT OF LEVEL+X)

X.XX = LOWER LIMIT OF LEVEL-X

UNITS 1170, 1178, AND 1180 ARE MIRROR IMAGES

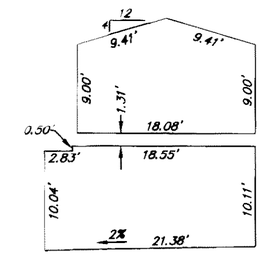

SECTION R-R

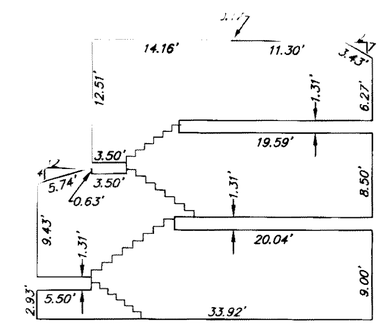

SECTION S-S

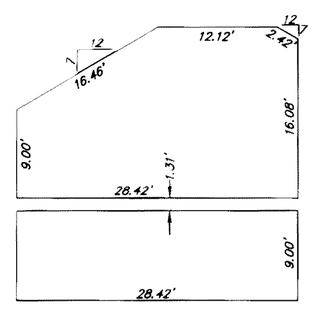

SECTION T-T

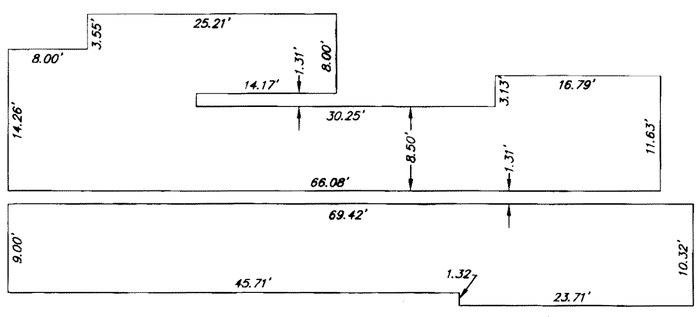

SECTION U-U

UNIT PLAN TYPE 6 - PLANS AND SECTIONS

SCALE: 1"=10'

CONDOMINIUM PLAN FOR

THE LODGES AT SNOWCREEK PHASE III

TOWN OF MAMMOTH LAKES, MONO COUNTY, CALIFORNIA

BEING A SUBDIVISION OF LOT 1 OF TRACT NO. 36-194C PER MAP RECORDED IN BOOK 10 OF TRACT MAPS, AT PAGES 93 THROUGH 98A

triad/holmes assoc.

SHEET 9 OF 9

C:\Land Projects 2004\1849-snowcreek-VI\dwg\SNOWCREEK-VI-Condo PhIII.dwg, 7/7/2005 5:36:37 AM, Jonathan Pitt