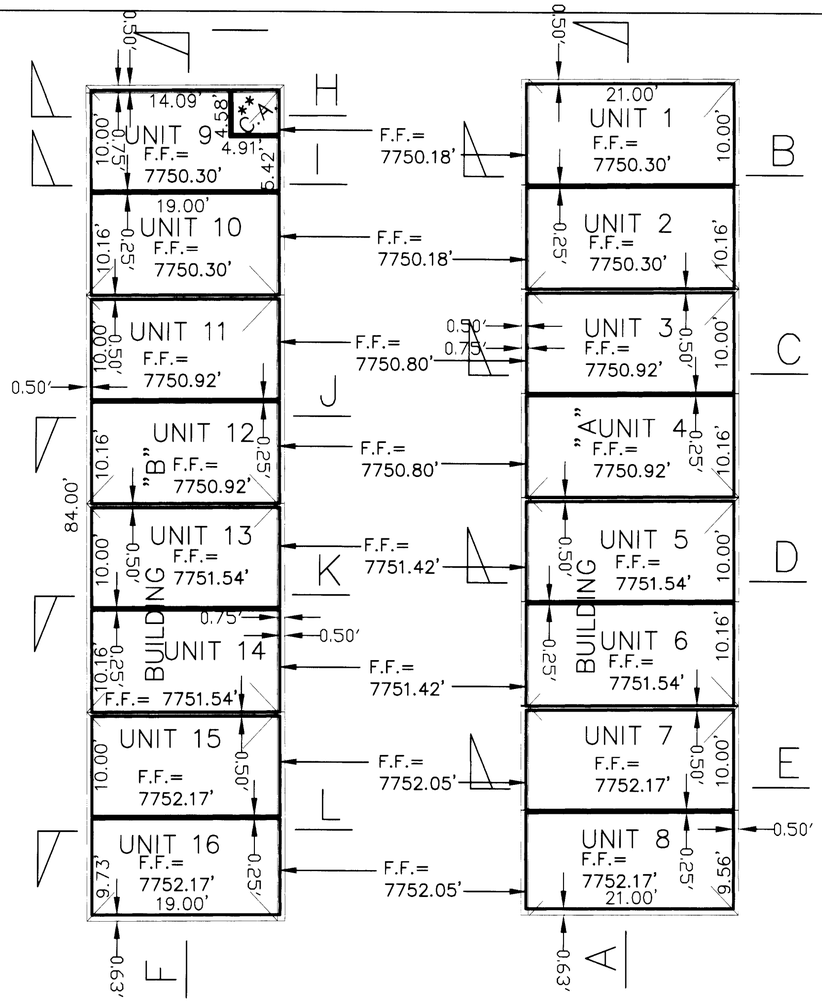

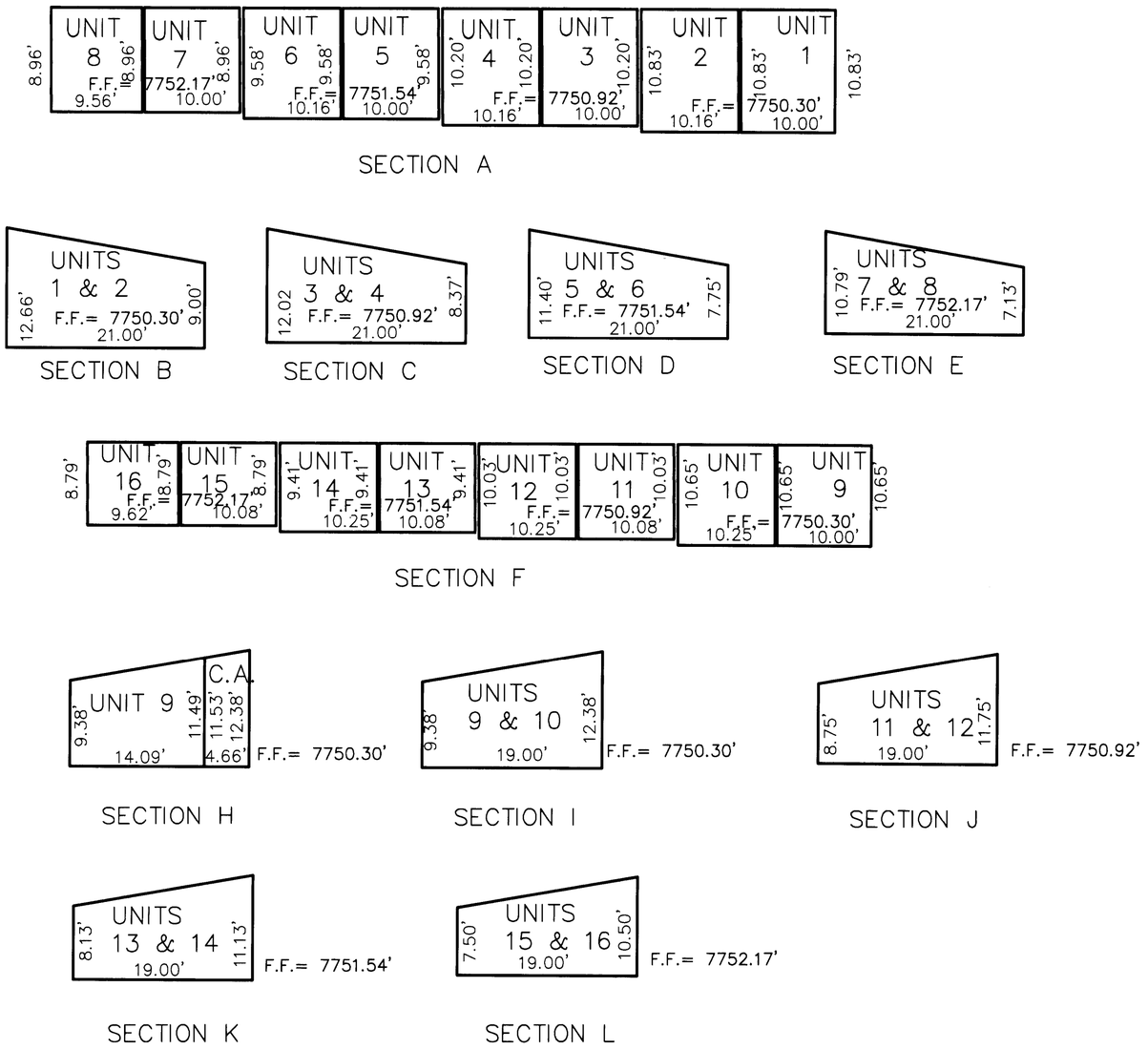

Condominium Areas:

Total area of Lot 17: 8408 sq.ft.
- Unit 1, condominium area: 210 sq.ft.
- Unit 2, condominium area: 214 sq.ft.
- Unit 3, condominium area: 210 sq.ft.
- Unit 4, condominium area: 214 sq.ft.
- Unit 5, condominium area: 210 sq.ft.
- Unit 6, condominium area: 214 sq.ft.
- Unit 7, condominium area: 210 sq.ft.
- Unit 8, condominium area: 201 sq.ft.
- **C.A. within Building A: 165 sq.ft.

Total area of Building A footprint: 1848 sq.ft.
- Unit 9, condominium area: 168 sq.ft.
- Unit 10, condominium area: 193 sq.ft.
- Unit 11, condominium area: 190 sq.ft.
- Unit 12, condominium area: 193 sq.ft.
- Unit 13, condominium area: 190 sq.ft.
- Unit 14, condominium area: 193 sq.ft.
- Unit 15, condominium area: 190 sq.ft.
- Unit 16, condominium area: 185 sq.ft.
- **C.A., within Building "B": 178 sq.ft.

Total area of Building B footprint: 1680 sq.ft.
- C.A., total area on property: 4880 sq.ft.

Condominium Volumes:

- Unit 1, condominium volume: 2274 cu.ft.
- Unit 2, condominium volume: 2312 cu.ft.
- Unit 3, condominium volume: 2142 cu.ft.
- Unit 4, condominium volume: 2178 cu.ft.
- Unit 5, condominium volume: 2012 cu.ft.
- Unit 6, condominium volume: 2045 cu.ft.
- Unit 7, condominium volume: 1882 cu.ft.
- Unit 8, condominium volume: 1801 cu.ft.
- Unit 9, condominium volume: 1438 cu.ft.
- Unit 10, condominium volume: 2100 cu.ft.
- Unit 11, condominium volume: 1948 cu.ft.
- Unit 12, condominium volume: 1978 cu.ft.
- Unit 13, condominium volume: 1829 cu.ft.
- Unit 14, condominium volume: 1858 cu.ft.
- Unit 15, condominium volume: 1710 cu.ft.
- Unit 16, condominium volume: 1665 cu.ft.

C.A. = COMMON AREA

** = COMMON AREA INCLUDES AIRSPACE IN THE WALLS

CONDOMINIUM PLAN FOR

474 COMMERCE CIRCLE

TOWN OF MAMMOTH LAKES, MONO COUNTY, CALIFORNIA

BEING A SUBDIVISION OF LOT 17 OF PARCEL MAP AMENDING PARCEL MAP NO. 36-174, IN THE TOWN OF MAMMOTH LAKES, COUNTY OF MONO, STATE OF CALIFORNIA, AS PER MAP RECORDED IN BOOK 4 PAGE 101, 101A AND 101B OF PARCEL MAPS, IN THE OFFICE OF THE COUNTY RECORDER