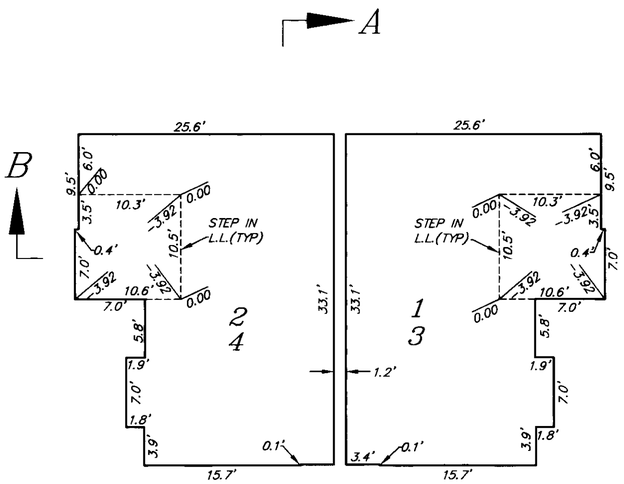

FIRST LEVEL

FIRST LEVEL ELEVATION LIMITS

UNIT	LOWER*	UPPER
1	8475.17	8484.17
2	8476.17	8485.17
3	8477.92	8486.92
4	8477.92	8486.92

*EXCEPT AS SHOWN ABOVE

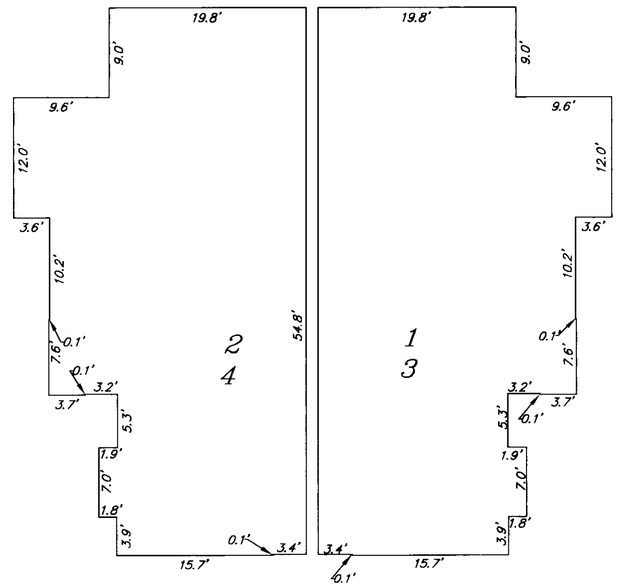

SECOND LEVEL

SECOND LEVEL ELEVATION LIMITS

UNIT	LOWER	UPPER*
1	8485.17	8494.17
2	8486.17	8495.17
3	8487.92	8496.92
4	8487.92	8496.92

*EXCEPT AS SHOWN ABOVE

LEGEND

X.XX DIFFERENCE IN UPPER LEVEL LIMIT AT POINT SHOWN FROM THAT SHOWN ON ELEVATION LIMIT TABLES

X.XX DIFFERENCE IN LOWER LEVEL LIMIT AT POINT SHOWN FROM THAT SHOWN ON ELEVATION LIMIT TABLES

L.L. LOWER VERTICAL LIMIT

U.L. UPPER VERTICAL LIMIT

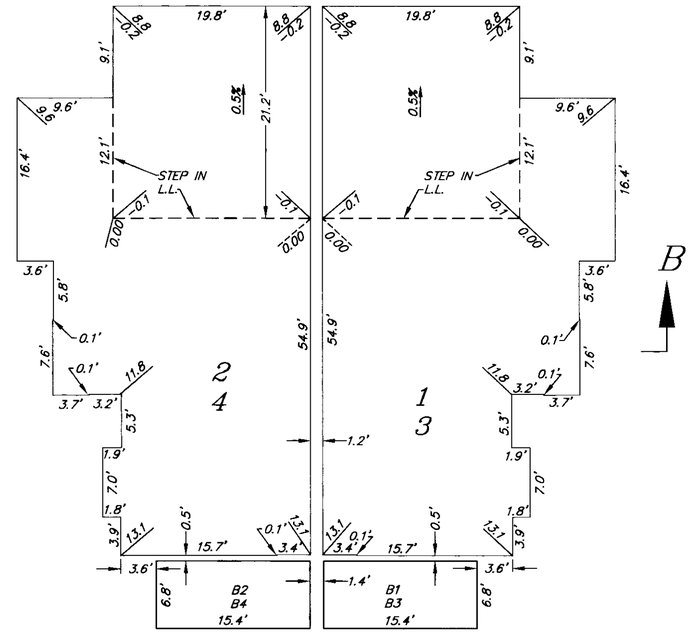

THIRD LEVEL

THIRD LEVEL ELEVATION LIMITS

UNIT	LOWER	UPPER*
1	8495.17	AS SHOWN
2	8496.17	AS SHOWN
3	8497.92	AS SHOWN
4	8497.92	AS SHOWN

*EXCEPT AS SHOWN ABOVE

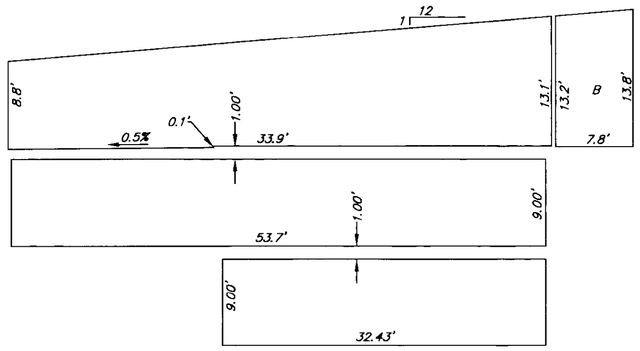

SECTION A-A

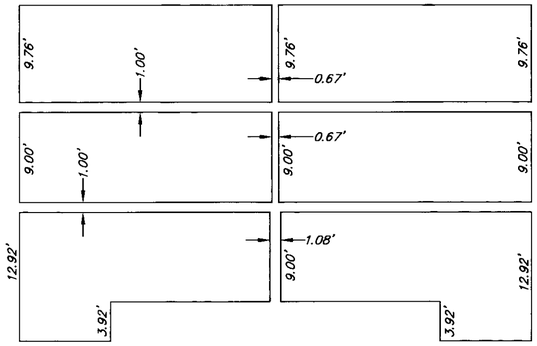

SECTION B-B

BLDG TYPE A PLANS AND SECTIONS

SCALE: 1"=10'

CONDOMINIUM PLAN FOR

ALTIS MAMMOTH PHASE I

TOWN OF MAMMOTH LAKES, MONO COUNTY, CALIFORNIA

BEING A SUBDIVISION OF LOT 1 OF TRACT NO. 36-249 PER MAP RECORDED IN BOOK 10 OF TRACT MAPS, AT PAGES 101a THROUGH 101aB

triad/holmes assoc.