Vol 6 pg 51

RECORD OF SURVEY

OF SEC. 9, T.1N., R.26E., M.D.B.M. AND A PORTION OF THE N.E. 1/4 OF THE N.E. 1/4 OF SEC. 8, T.1N., R.26E., M.D.B.M. IN THE COUNTY OF MONO, STATE OF CALIFORNIA.

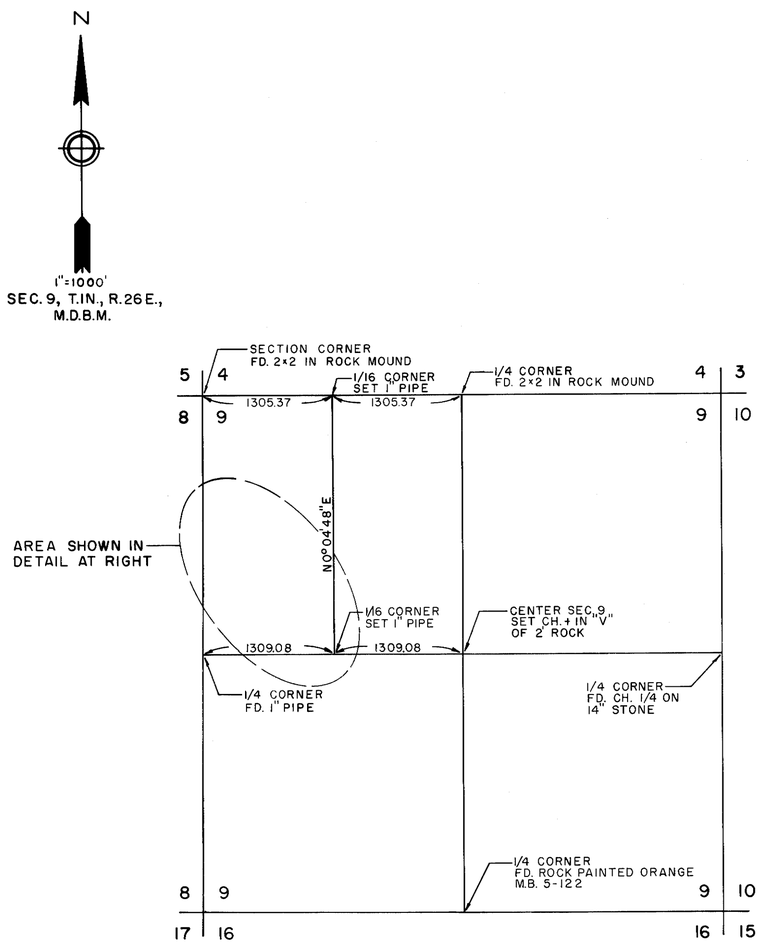

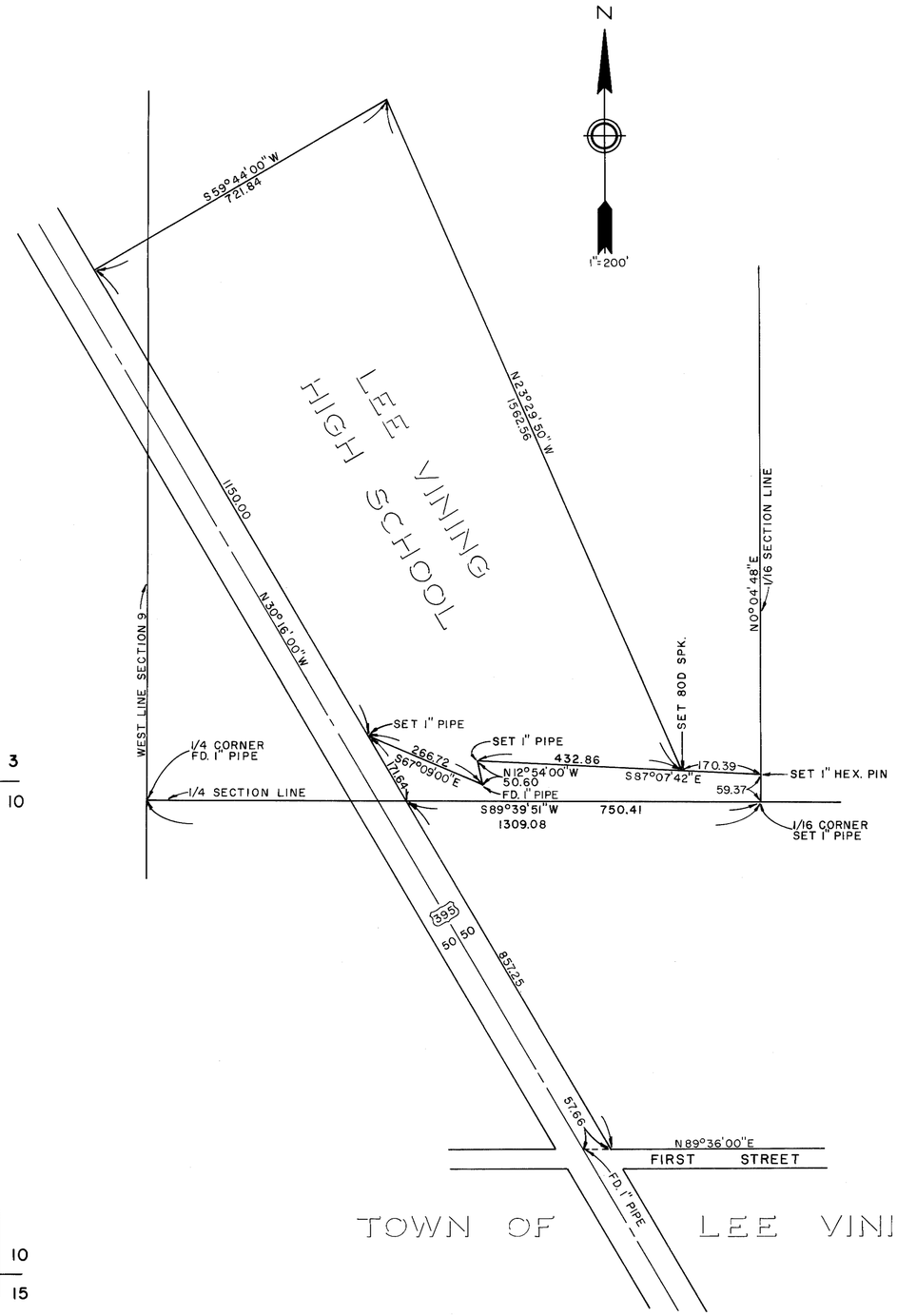

THIS map correctly represents a survey made by me or under my direction in conformance with the Land Surveyors Act at the request of the City Of Los Angeles, Dept. Of Water And Power in December 1968.

E M Macaulay
REGISTERED CIVIL ENGINEER 10445

THIS map has been examined for conformance with the requirements of the Land Surveyors Act this_____day of_____1969.

_____
COUNTY SURVEYOR

No. 318

FILED for record this 29 day of Aug 1969, at 1:25 p.m. in Book 6 of Maps at page 57, at the request of the City of Los Angeles, Dept. of Water and Power.

Anne M. Krebs
COUNTY RECORDER

NOTE:
Bearings are based on that certain course N30°16'00"W being the NE'ly right of way of California State Highway U.S. 395 as shown on Record Of Survey Map filed in Book 5, Page 14 Of Maps, in the office of the County Recorder for the County Of Mono, State Of California.

SHEET 1 OF 1

C.E.Q. 8-69